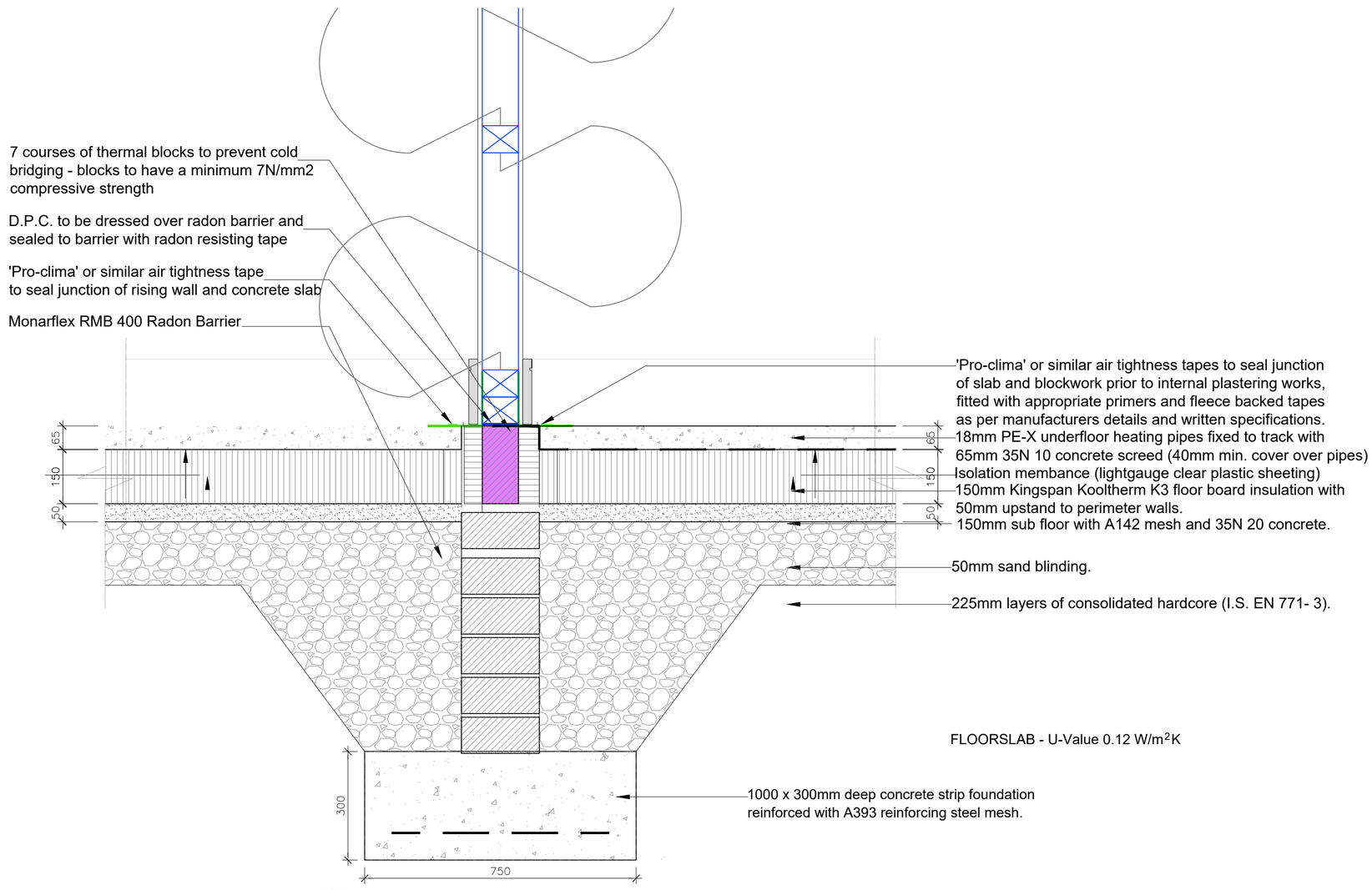

03
1:10

DETAIL 03
TYPICAL SECTION THROUGH INTERNAL WALL

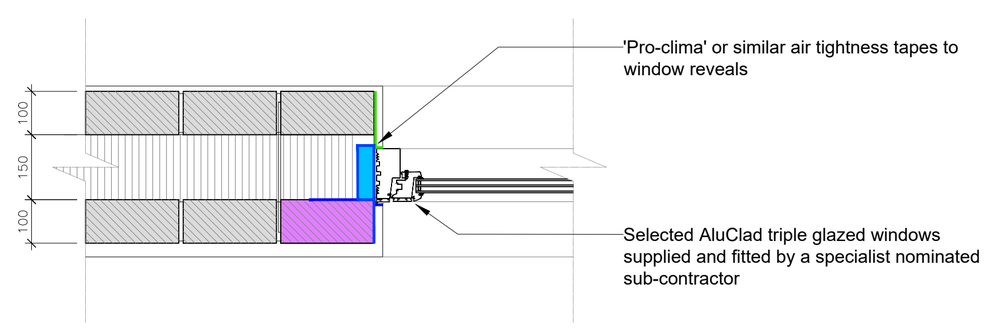

04
1:10

DETAIL 07
TYPICAL WINDOW JAMB DETAIL

IMPORTANT NOTE:

SKETCH AND DESIGN STAGE:
All drawings are for discussion purposes only. Drawings are not to be used for any other purpose.

PLANNING STAGE:
All drawings are for planning application purposes only. Drawings are not to be used for any other purpose. Any changes made to these drawings are subject to immediate approval by Brendan Moore Architects. figured dimensions only to be used from this drawing.

CONSTRUCTION STAGE:
All drawings are for construction purposes only. Drawings are not to be used for any other purpose. Drawings to be checked on site by the contractor prior to commencement of any work. Brendan Moore Architects to be informed of any discrepancies immediately. figured dimensions only to be used from this drawing.

NOTES:

BRENDAN MOORE **ARCHITECTS**
38 ST. KIERAN'S STREET, KILKENNY, R95 KN80, IRELAND

PROJECT: Proposed Extension to Urlingford Community Childcare Centre, St. Kierans Place, Urlingford, Co.Kilkenny, E32 T6Y7.

CLIENT: Michael kenny

SCALE: 1/10@A1

DRAWING: Tender

Details 03 & 04

353-87-4120718 brendan@bmarchitects.ie www.bmarchitects.ie

Job No: 24-152

Drwg No: 24-152 T-701

Date: May.2026

Drawn By: SP

BRENDAN MOORE **ARCHITECTS**